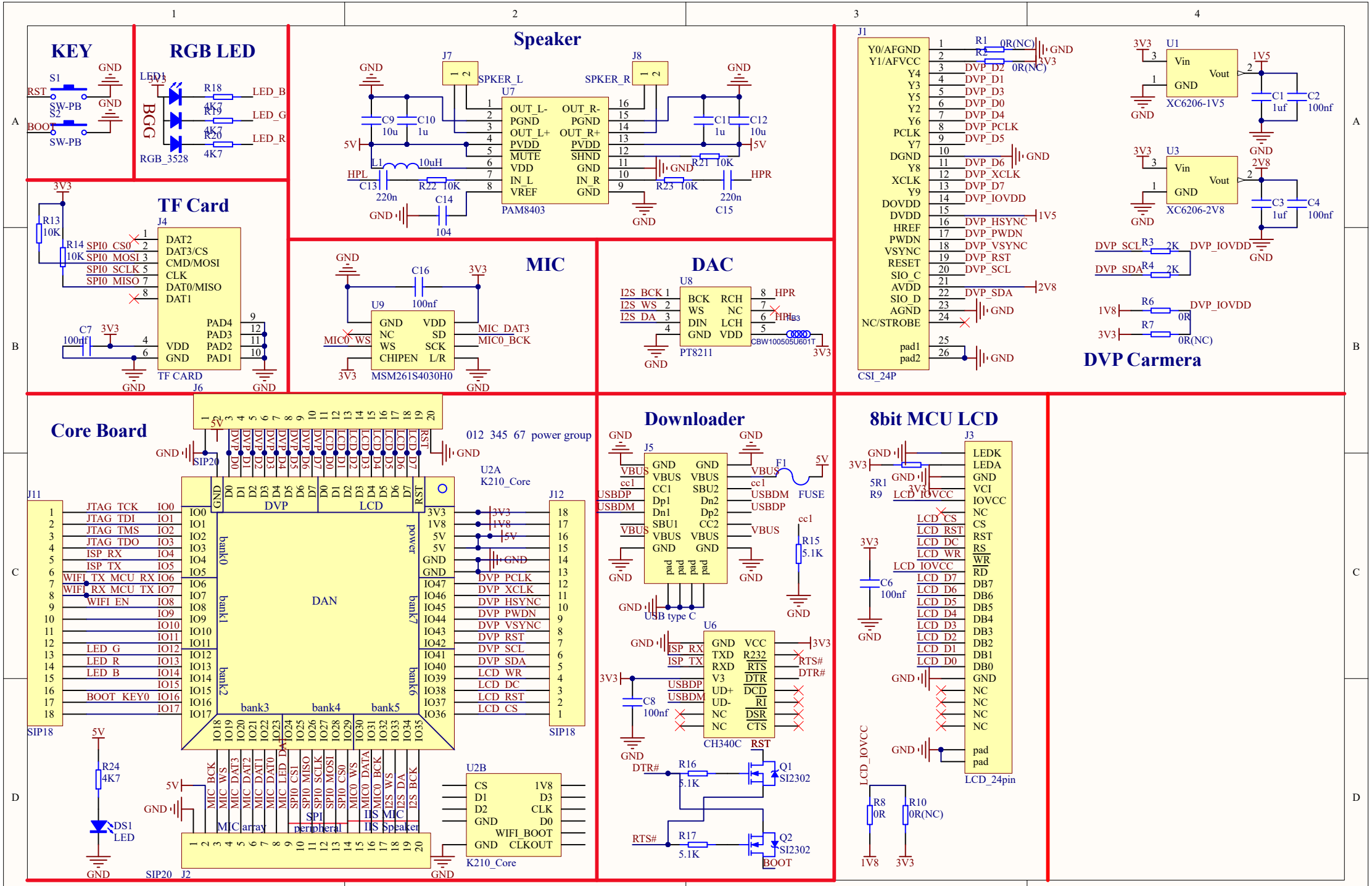
KEY
S1
RST
SW-PB
S2
BOOT
SW-PB
GND
RGB LED
LED1
3V3
R18
4K7
R19
4K7
R20
4K7
LED_B
LED_G
LED_R
BGG
RGB_3528
Speaker
J7
J8
SPKER_L
SPKER_R
U7
OUT_L-
PGND
OUT_L+
PVDD
MUTE
VDD
IN_L
VREF
OUT_R-
PGND
OUT_R+
PVDD
SHND
GND
IN_R
GND
PAM8403
C9
10u
C10
1u
C11
1u
C12
10u
5V
L1
10uH
HPL
HPR
C13
220n
R22
10K
C14
104
R21
10K
R23
10K
C15
220n
TF Card
J4
3V3
R13
10K
R14
10K
SPI0_CS0
SPI0_MOSI
SPI0_SCLK
SPI0_MISO
DAT2
DAT3/CS
CMD/MOSI
CLK
DAT0/MISO
DAT1
PAD4
PAD3
PAD2
PAD1
VDD
GND
C7
100nf
TF CARD
MIC
C16
100nf
U9
GND
NC
WS
CHIPEN
VDD
SD
SCK
L/R
MIC_DAT3
MIC0_BCK
MIC0_WS
MSM261S4030H0
DAC
U8
I2S_BCK
I2S_WS
I2S_DA
BCK
WS
DIN
GND
RCH
NC
LCH
VDD
HPR
HPL
CBW1005050U601T
PT8211
J1
Y0/AFGND
Y1/AFVCC
Y4
Y3
Y5
Y2
Y6
PCLK
Y7
DGND
Y8
XCLK
Y9
DOVDD
DVDD
HREF
PWDN
VSYNC
RESET
SIO_C
AVDD
SIO_D
AGND
NC/STROBE
pad1
pad2
DVP_D2
DVP_D1
DVP_D3
DVP_D0
DVP_D4
DVP_PCLK
DVP_D5
DVP_D6
DVP_XCLK
DVP_D7
DVP_IOVDD
DVP_HSYNC
DVP_PWDN
DVP_VSYNC
DVP_RST
DVP_SCL
DVP_SDA
R1
0R(NC)
R2
0R(NC)
1V5
2V8
CSI_24P
U1
Vin
Vout
GND
XC6206-1V5
C1
1uf
C2
100nf
U3
XC6206-2V8
C3
1uf
C4
100nf
R3
2K
R4
2K
R6
0R
R7
0R(NC)
DVP Carmera
Core Board
J6
SIP20
U2A
K210_Core
J11
SIP18
J12
SIP18
JTAG_TCK
JTAG_TDI
JTAG_TMS
JTAG_TDO
ISP_RX
ISP_TX
WIFI_TX_MCU_RX
WIFI_RX_MCU_TX
WIFI_EN
LED_G
LED_R
LED_B
BOOT_KEY0
012 345 67 power group
DVP
LCD
DAN
bank0
bank1
bank2
bank3
bank4
bank5
bank6
bank7
power
DVP_PCLK
DVP_XCLK
DVP_HSYNC
DVP_PWDN
DVP_VSYNC
DVP_RST
DVP_SCL
DVP_SDA
LCD_WR
LCD_DC
LCD_RST
LCD_CS
R24
4K7
DS1
LED
MIC_BCK
MIC_WS
MIC_DAT3
MIC_DAT2
MIC_DAT1
MIC_DAT0
MIC_LED_DAT
SPI0_CS1
SPI0_MISO
SPI0_SCLK
SPI0_MOSI
SPI0_CS0
MIC0_WS
MIC0_DATA
MIC0_BCK
I2S_WS
I2S_DA
I2S_BCK
MIC array
SPI peripheral
IIS MIC
IIS Speaker
U2B
K210_Core
CS
D1
D2
GND
1V8
D3
CLK
D0
WIFI_BOOT
CLKOUT
J2
Downloader
J5
USB type C
VBUS
cc1
USBDP
USBDM
F1
FUSE
R15
5.1K
U6
CH340C
ISP_RX
ISP_TX
TXD
RXD
V3
UD+
UD-
NC
R232
RTS
DTR
DCD
RI
DSR
CTS
RTS#
DTR#
C8
100nf
R16
5.1K
R17
5.1K
Q1
SI2302
Q2
SI2302
BOOT
8bit MCU LCD
J3
LCD_24pin
LEDK
LEDA
VCI
IOVCC
CS
RST
DC
WR
RD
DB7
DB6
DB5
DB4
DB3
DB2
DB1
DB0
pad
R9
5R1
C6
100nf
R8
0R
R10
0R(NC)