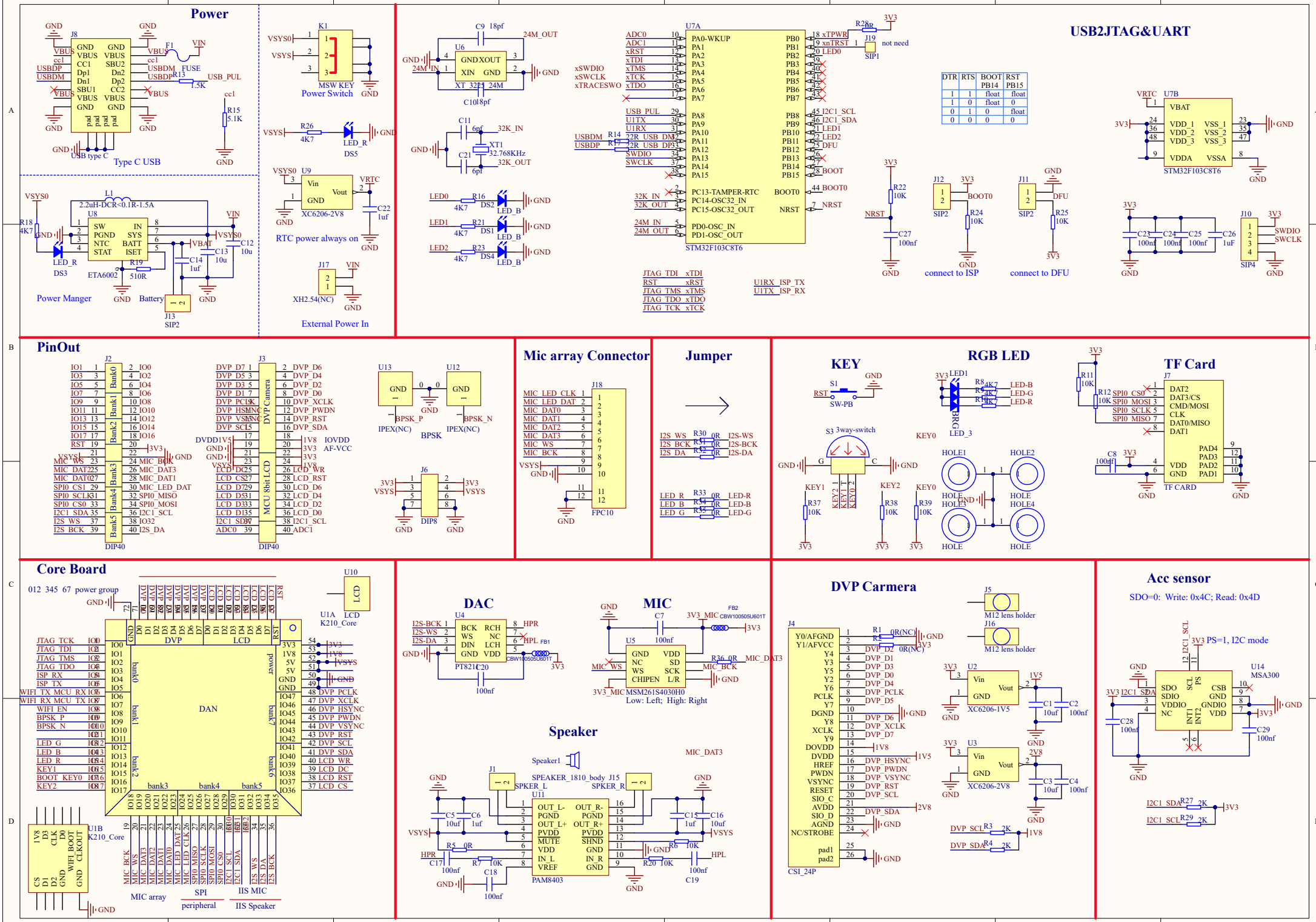
Power
Type C USB
Power Manger
Power Switch
RTC power always on
External Power In
USB2JTAG&UART
connect to ISP
connect to DFU
PinOut
Mic array Connector
Jumper
KEY
RGB LED
TF Card
Core Board
DAC
MIC
Speaker
DVP Carmera
Acc sensor
SDO=0: Write: 0x4C; Read: 0x4D
PS=1, I2C mode