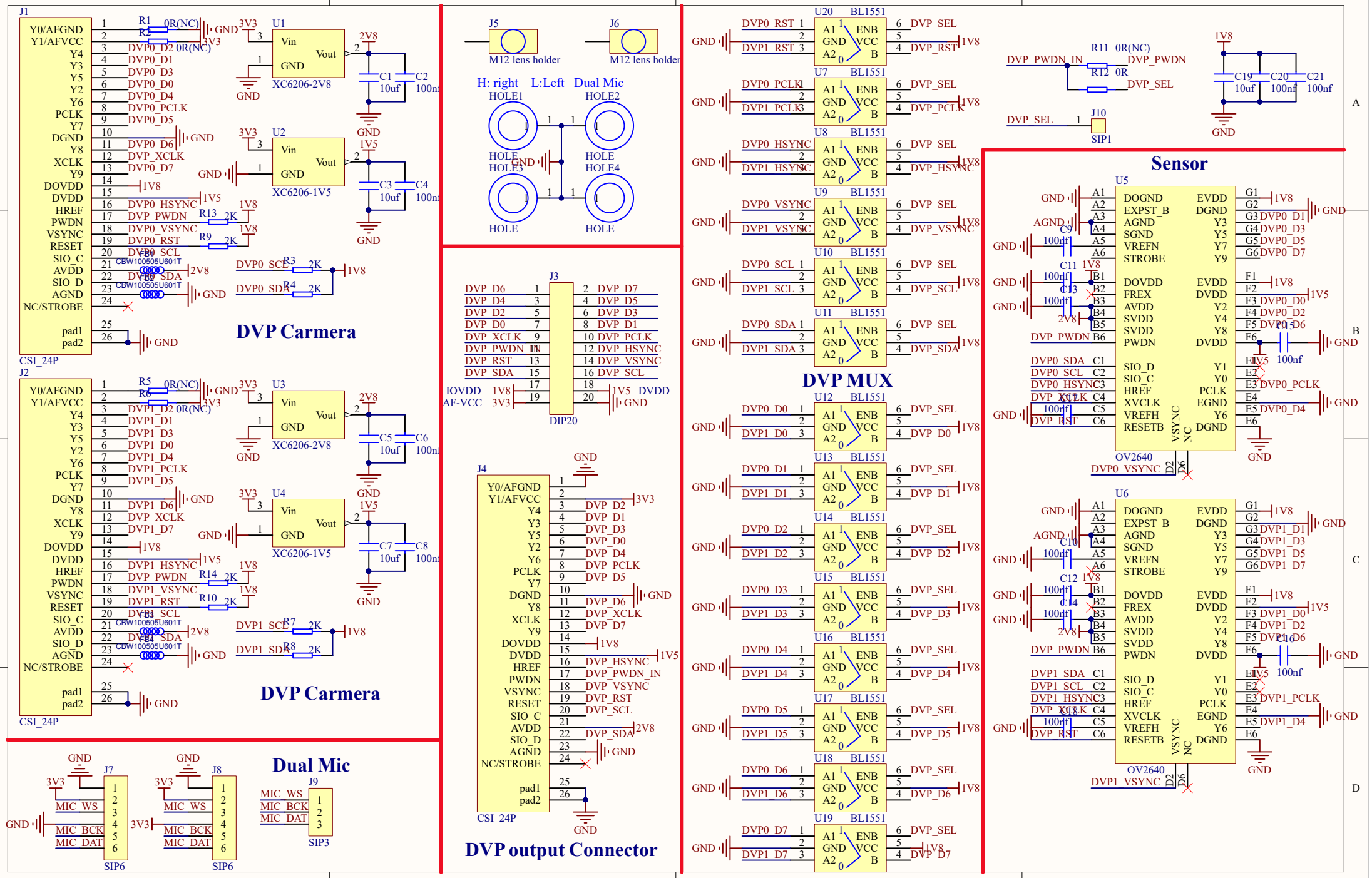
DVP Carmera
DVP Carmera
Dual Mic
DVP output Connector
DVP MUX
Sensor
J1
CSI_24P
J2
CSI_24P
U1
XC6206-2V8
U2
XC6206-1V5
U3
XC6206-2V8
U4
XC6206-1V5
J3
DIP20
J4
CSI_24P
J5
M12 lens holder
J6
M12 lens holder
H: right L:Left Dual Mic
HOLE1
HOLE2
HOLE3
HOLE4
J7
SIP6
J8
SIP6
J9
SIP3
U20 BL1551
U7 BL1551
U8 BL1551
U9 BL1551
U10 BL1551
U11 BL1551
U12 BL1551
U13 BL1551
U14 BL1551
U15 BL1551
U16 BL1551
U17 BL1551
U18 BL1551
U19 BL1551
J10
SIP1
U5
OV2640
U6
OV2640